REVISIONS			
REV	DESCRIPTION	DATE	APPROVED

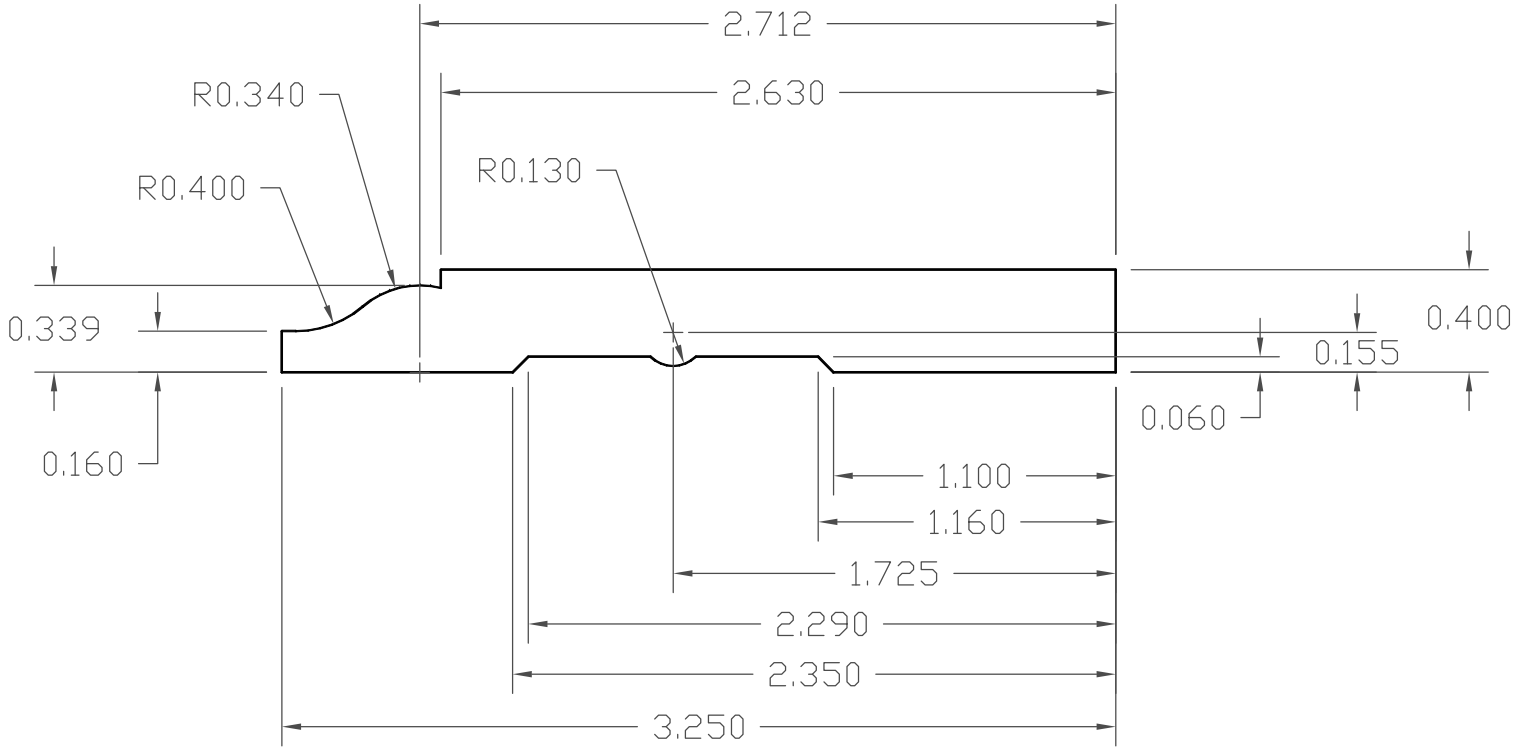

SENECA MILLWORK
Since 1873

Part No: CLBS			Scale NA
Drawn by RLM	Checked by	Date 9/30/09	
Filename CLBS.dwg		Drawing No: CLBS-P.dwg	
Tolerances: ±0.010" Unless Noted			
Production Drawing		Rev	Sheet 1 of 3