REVISIONS			
REV	DESCRIPTION	DATE	APPROVED

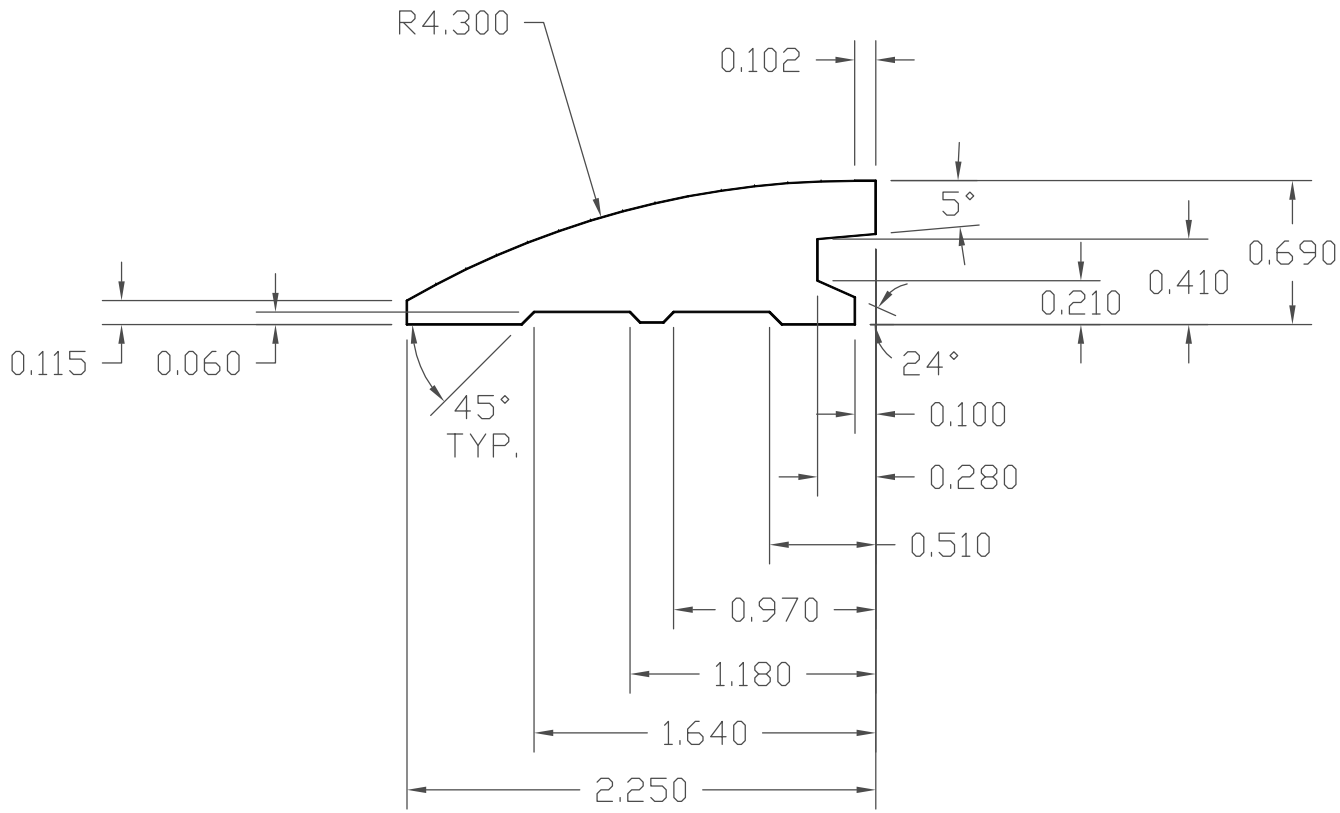

SENECA MILLWORK
Since 1873

Part No: 34KR			Scale NA
Drawn by RLM	Checked by	Date 10/22/09	
Filename 34KR.dwg		Drawing No: 34KR-P.dwg	
Tolerances: ±0.010" Unless Noted			
Production Drawing		Rev	Sheet 1 of 4